# Z-SUBGIRT

PREFORMED CLADDING SUPPORT

# TECHNICAL INFORMATION

## VERTICAL Z-SUBGIRT SYSTEM UTILIZING ISO CLIPS

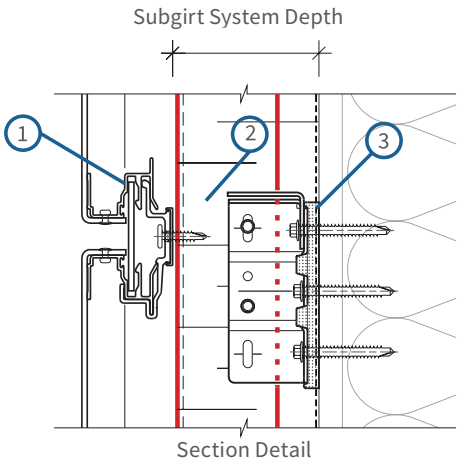


Section Detail

1. Panel System
2. Z - Subgirt
3. ISO Clip

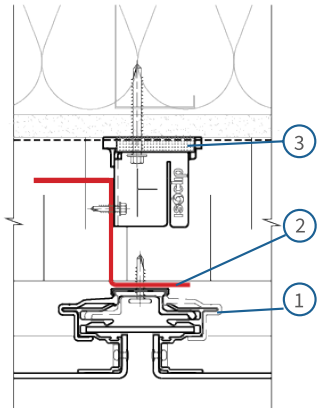


Plan Detail

## 2.0" ISO CLIP COMPATIBLE Z-SUBGIRT

**VERTICAL ORIENTATION**

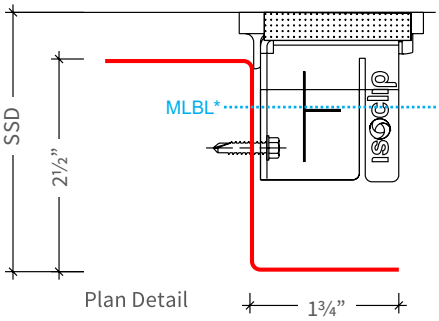


| Insulation Depth | Subgirt Dimensions | Subgirt System Depth (SSD) | Profile |
|---|---|---|---|
| 3" - 3½" | 1¾" x 2½" x 1¾" | 2" - 2⅝" | A |

- Available in Galvanized G90 or Galvalume
- Gauges Available: 20, 18, 16, 14
- Min/Max Lengths Available: 4' - 20'
- MLBL* Subgirt must be installed past the Minimum Load Bearing Line

## 3.25" ISO CLIP COMPATIBLE Z-SUBGIRT

**VERTICAL ORIENTATION**

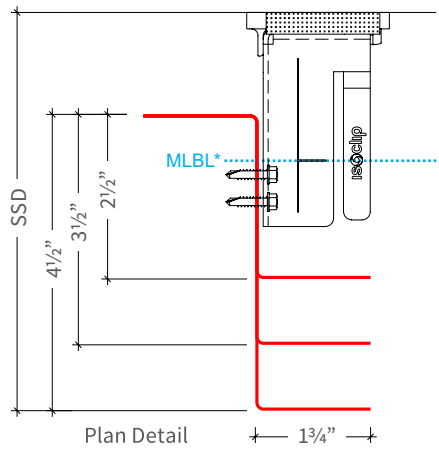


| Insulation Depth | Subgirt Dimensions | Subgirt System Depth (SSD) | Profile |
|---|---|---|---|
| 4" | 1¾" x 2½" x 1¾" | 3¾" - 4¾" | A |
| 5" | 1¾" x 3½" x 1¾" | 4¾" - 5¾" | B |
| 6" | 1¾" x 4½" x 1¾" | 5¾" - 6¾" | C |

- Available in Galvanized G90 or Galvalume
- Gauges Available: 20, 18, 16, 14
- Min/Max Lengths Available: 4' - 20'
- MLBL* Subgirt must be installed past the Minimum Load Bearing Line

isoclip
THERMAL ISOLATION CLIP
ISOCLIPS.COM
1-844-740-2050
info@isoclips.com

Fabricated by
Northern Facades Ltd.
Northernfacades.com

# Z-SUBGIRT

PREFORMED CLADDING SUPPORT

# TECHNICAL INFORMATION

## 4.75" ISO CLIP COMPATIBLE Z-SUBGIRT

**VERTICAL ORIENTATION**

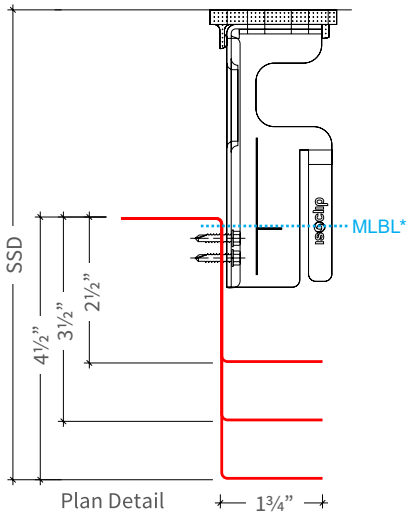


| Insulation Depth | Subgirt Dimensions | Subgirt System Depth (SSD) | Profile |
|---|---|---|---|
| 6" | 1¾" x 2½" x 1¾" | 5¼" - 6¼" | A |
| 7" | 1¾" x 3½" x 1¾" | 6¼" - 7¼" | B |
| 8" | 1¾" x 4½" x 1¾" | 7¼" - 8¼" | C |

- Available in Galvanized G90 or Galvalume
- Gauges Available: 20, 18, 16, 14
- Min/Max Lengths Available: 4' - 20'
- MLBL* Subgirt must be installed past the Minimum Load Bearing Line

## 7.75" ISO CLIP COMPATIBLE Z-SUBGIRT

**VERTICAL ORIENTATION**

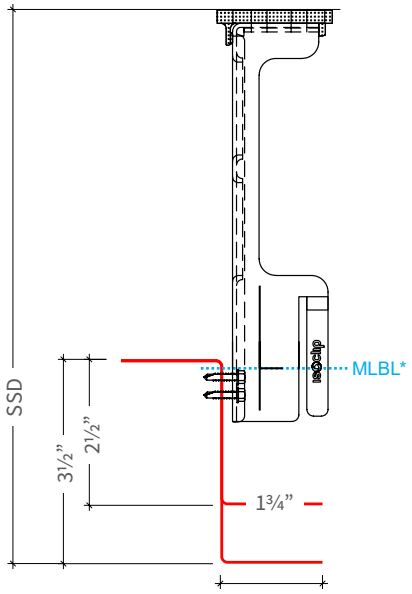


Plan Detail

| Insulation Depth | Subgirt Dimensions | Subgirt System Depth (SSD) | Profile |
|---|---|---|---|
| 9" | 1¾" x 2½" x 1¾" | 8¼" - 9¼" | A |
| 10" | 1¾" x 3½" x 1¾" | 9¼" - 10¼" | B |

- Available in Galvanized G90 or Galvalume
- Gauges Available: 20, 18, 16, 14
- Min/Max Lengths Available: 4' - 20'
- MLBL* Subgirt must be installed past the Minimum Load Bearing Line

isoclip
THERMAL ISOLATION CLIP


ISOCLIPS.COM
1-844-740-2050
info@isoclips.com

Fabricated by
Northern Facades Ltd.
Northernfacades.com