L-SUBGIRT

PREFORMED CLADDING SUPPORT

TECHNICAL INFORMATION

HORIZONTAL L-SUBGIRT SYSTEM UTILIZING ISO CLIPS

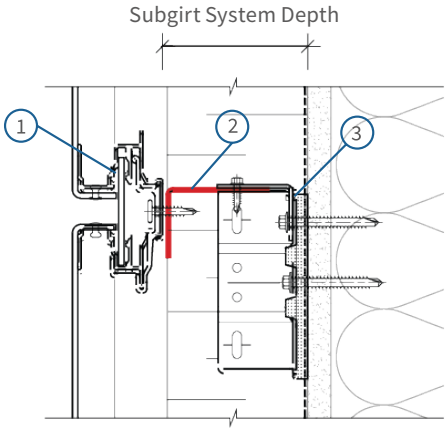

Section Detail

1. Panel System
2. L - Subgirt
3. ISO Clip

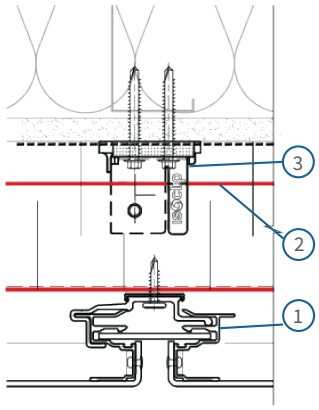

Plan Detail

VERTICAL L-SUBGIRT SYSTEM UTILIZING ISO CLIPS

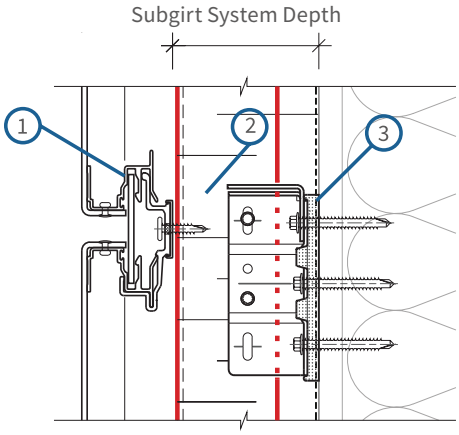

Section Detail

1. Panel System
2. L - Subgirt
3. ISO Clip

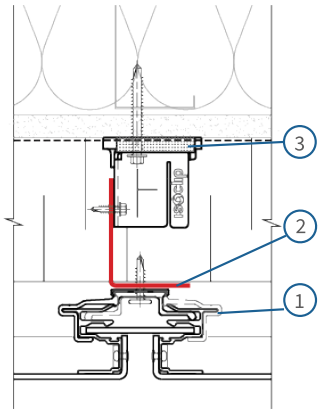

Plan Detail

2.0" ISO CLIP COMPATIBLE L-SUBGIRT

HORIZONTAL ORIENTATION

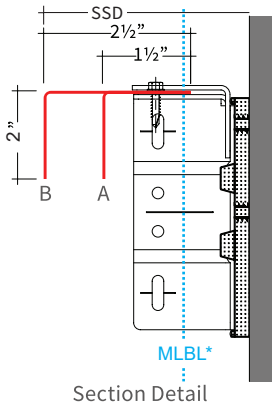

Section Detail

Insulation Depth	Subgirt Dimensions	Subgirt System Depth (SSD)	Profile
2" - 2½"	1½" x 2"	2" - 2⅝"	A
3" - 3½"	2½" x 2"	3" - 3⅝"	B

- Available in Galvanized G90 or Galvalume
- Gauges Available: 20, 18, 16, 14
- Min/Max Lengths Available: 4' - 20'
- MLBL* Subgirt must be installed past the Minimum Load Bearing Line

VERTICAL ORIENTATION

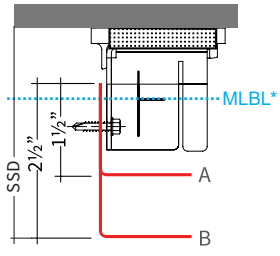

Plan Detail

isoclip
THERMAL ISOLATION CLIP
ISOCLIPS.COM
1-844-740-2050
info@isoclips.com

Fabricated by
Northern Facades Ltd.
Northernfacades.com

L-SUBGIRT

PREFORMED CLADDING SUPPORT

TECHNICAL INFORMATION

3.25" ISO CLIP COMPATIBLE L-SUBGIRT

HORIZONTAL ORIENTATION

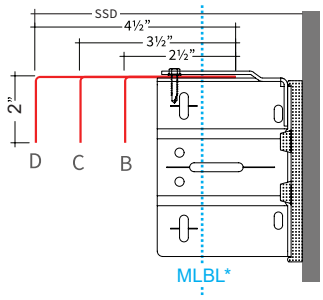

Section Detail

Insulation Depth	Subgirt Dimensions	Subgirt System Depth (SSD)	Profile
4"	2½" x 2"	3¾" - 4¾"	B
5"	3½" x 2"	4¾" - 5¾"	C
6"	4½" x 2"	5¾" - 6¾"	D

- Available in Galvanized G90 or Galvalume
- Gauges Available: 20, 18, 16, 14
- Min/Max Lengths Available: 4' - 20'
- MLBL* Subgirt must be installed past the Minimum Load Bearing Line

VERTICAL ORIENTATION

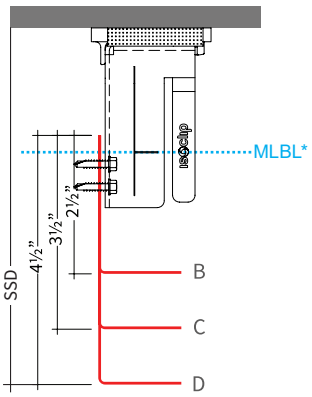

Plan Detail

4.75" ISO CLIP COMPATIBLE L-SUBGIRT

HORIZONTAL ORIENTATION

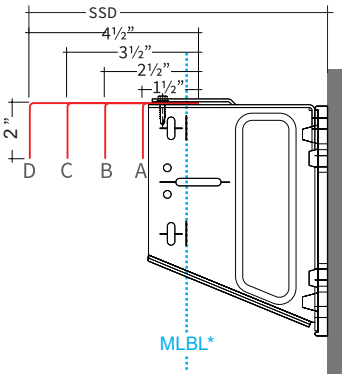

Section Detail

Insulation Depth	Subgirt Dimensions	Subgirt System Depth (SSD)	Profile
5"	1½" x 2"	4¾" - 5¼"	A
6"	2½" x 2"	5¼" - 6¼"	B
7"	3½" x 2"	6¼" - 7¼"	C
8"	4½" x 2"	7¼" - 8¼"	D

- Available in Galvanized G90 or Galvalume
- Gauges Available: 20, 18, 16, 14
- Min/Max Lengths Available: 4' - 20'
- MLBL* Subgirt must be installed past the Minimum Load Bearing Line

VERTICAL ORIENTATION

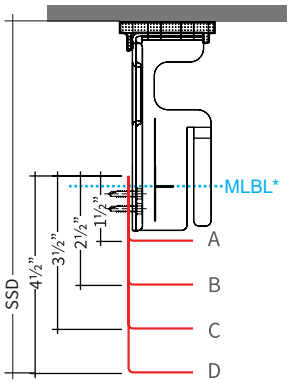

Plan Detail

7.75" ISO CLIP COMPATIBLE L-SUBGIRT

HORIZONTAL ORIENTATION

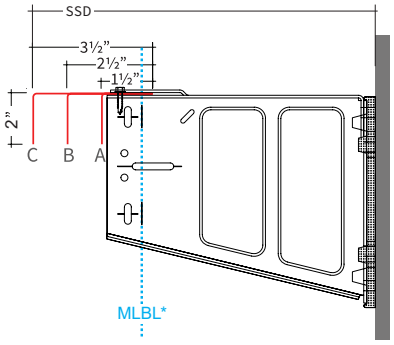

Section Detail

Insulation Depth	Subgirt Dimensions	Subgirt System Depth (SSD)	Profile
8"	1½" x 2"	7¾" - 8¼"	A
9"	2½" x 2"	8¼" - 9¼"	B
10"	3½" x 2"	9¼" - 10¼"	C

- Available in Galvanized G90 or Galvalume
- Gauges Available: 20, 18, 16, 14
- Min/Max Lengths Available: 4' - 20'
- MLBL* Subgirt must be installed past the Minimum Load Bearing Line

VERTICAL ORIENTATION

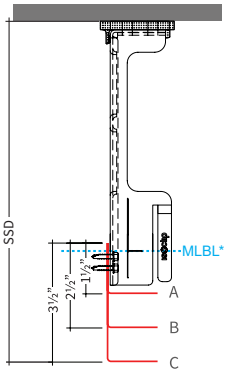

Plan Detail

isoclip
THERMAL ISOLATION CLIP

ISOCLIPS.COM
1-844-740-2050
info@isoclips.com

Fabricated by
Northern Facades Ltd.
Northernfacades.com