Patent No.: US 11,814,848 B2
Date of Patent: Nov. 14, 2023

7.75" ISO Clip







ISO Clip significantly reduces thermal bridging within external rain screen assemblies improving insulation effective-R values while providing flexibility for facade design. It is a key building component that helps to achieve thermally efficient building envelopes without compromising on design intent of the project, essential for energy conservation and our shared sustainable future.

Technical Information:

The ISO Clip creates a thermal break separating the interior of the building from the exterior. Its unique design features reduce thermal transfer through the building envelope. The 7.75" clip with built in adjustment eliminates the need for shims and can accommodate insulation from 8" - 10". It is engineered to perform on all substrates including concrete, concrete block, steel studs or wood.

Material Composition:

14ga ASTM A792 [Galvalume]TM or ASTM 653 [Galvanized] steel clip with an integral glass fibre reinforced polyamide thermal isolator pad. Also available fully encapsulated in a special coating for use in Salmon-Safe specified projects.

"ISO Clip helps protect downstream water quality and is consistent for use in Salmon-Safe projects."

– Dan Kent, Salmon-Safe

Next Generation Performance:

ISO Clip is suitable for either vertical or horizontal subgirts. Its versatility, thermal performance, and ease of use make ISO Clip the product to specify for high-performance building envelopes. The thermal performance of the clip has been modeled and evaluated by the industry leaders, Evoke and Stantec.

Horizontal Subgirt

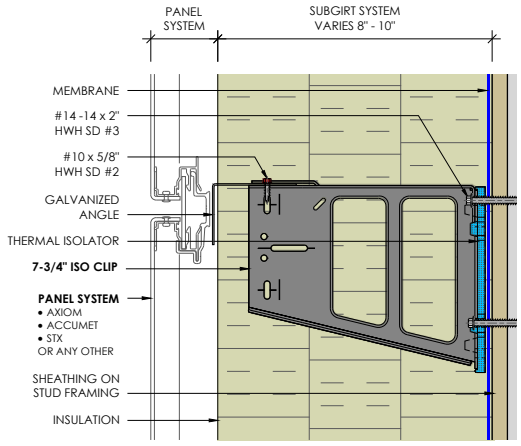

Vertical Subgirt

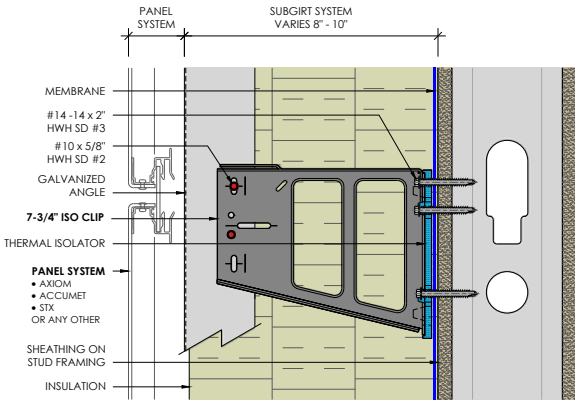

ISOCLIPS.COM
1-844-740-2050
info@isoclips.com

Fabricated by
Northern Facades Ltd.
Northernfacades.com

7.75" ISO Clip

FASTENER RECOMMENDATIONS:

Girt Fastener: 10-16 x 5/8" Ind. Hex Washer Head (5/16AF)

Steel Stud Assembly: 14-14 x 2" Ind. Hex Washer Head (5/16AF)

Wood Stud Fasteners: #14 HWH cladding (metal to wood) fastener

Concrete Wall: 2-¼" long #14 Tapcons


Declare.

ISO Clip
Northern Facades Limited

Final Assembly: Markham, Ontario, Canada
Life Expectancy: LIFE OF STRUCTURE Year(s)
End of Life Options: Salvageable/Reusable in its Entirety, Recyclable (100%)

Ingredients:

Iron; Poly[imino(1,6-dioxo-1,6- hexanediyl)imino-1,6-hexanediyl]; Glass, oxide, chemicals; Undisclosed (0.425-0.913%)[1]; Zinc; Manganese; Copper; Nickel (Metallic); Graphite; Chromium, metallic; Molybdenum; Sulfur, Elemental; Phosphorus; Titanium

[1]LBC Temp Exception RL-004b - Proprietary Ingredients in Declare

Living Building Challenge Criteria: Compliant

I-13 Red List:
☐ LBC Red List Free
■ LBC Red List Approved
☐ Declared

% Disclosed: 99.09% at 100ppm
VOC Content: Not Applicable

I-10 Interior Performance: Not Applicable
I-14 Responsible Sourcing: Not Applicable

NOF-0001
EXP. 01 MAR 2026
Original Issue Date: 2021

INTERNATIONAL LIVING FUTURE INSTITUTE™ living-future.org/declare

Key Features & Benefits of the ISO Clip:

Efficient:

- Improved building energy efficiency through a reduction in thermal bridging utilizing an optimized thermal pad design
- High load capacity, less ISO Clips may be required compared to synthetic or aluminum clips which means less to install and less thermal bridging
- ISO Clips may assist towards achieving multiple LEED V4 credits as a component part of the wall assembly
- ASHRAE 90.1, NECB, SB-10 compliant, with thermal analysis available
- ISO Clip has successfully passed the NFPA 285 Standard Test Method for Evaluation of Fire Propagation Characteristics of Exterior Wall Assemblies Containing Minor Combustible Components and the CAN / ULC S134-13 Standard Test Method for Fire Test of Exterior Wall Assemblies

Performance:

- Adjustment up to + / - 1/2" wall deviation, no shims required
- Built in "helping hand" for ease and speed of installation
- Always installed in the same direction regardless of horizontal or vertical girt orientation.
- 7.75" ISO Clip is suitable for 8" to 10" of insulation

Availability & Pricing:

- Cost Effective
- North American Made
- Readily Available Stock from a growing network of distributors

Specifying ISO Clip is simple using these leading platforms or visit www.isoclips.com

ARCAT BSD SpecLink

7.75" ISO CLIP COMPATIBLE L-SUBGIRT

HORIZONTAL ORIENTATION

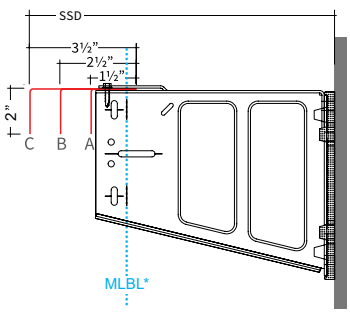

Section Detail

Insulation Depth	Subgirt Dimensions	Subgirt System Depth (SSD)	Profile
8"	1½" x 2"	7¾" - 8¼"	A
9"	2½" x 2"	8¼" - 9¼"	B
10"	3½" x 2"	9¼" - 10¼"	C

- Available in Galvanized G90 or Galvalume
- Gauges Available: 20, 18, 16, 14
- Min/Max Lengths Available: 4' - 20'
- MLBL* Subgirt must be installed past the Minimum Load Bearing Line

VERTICAL ORIENTATION

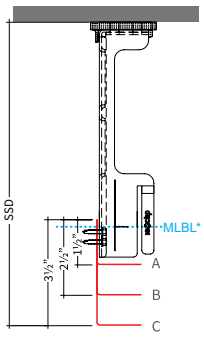

Plan Detail

ISOCLIPS.COM
1-844-740-2050
info@isoclips.com

Fabricated by
Northern Facades Ltd.
Northernfacades.com

16021-030323